2300/20 and 2300/25 2300 Vibration Monitors

Datasheet

Bently Nevada Machinery Condition Monitoring

105M0340 Rev. AB

Description

The 2300 Vibration Monitors provide cost-effective continuous vibration monitoring and protection capabilities for less critical and spared machinery. They are specifically designed to continuously monitor and protect essential medium to low criticality machinery in a wide range of industries including: oil & gas, power generation, water treatment, pulp and paper, manufacturing, mining, cement, and other industries.

The 2300 Vibration Monitors deliver vibration monitoring and high vibration level alarming. They include two channels of seismic or proximity measurement inputs from various accelerometer, Velomitor and Proximitor types, a speed input channel for time-synchronous measurements, and outputs for relay contacts. The 2300/20 monitor features a configurable 4-20 mA output which interfaces more points to a DCS. The 2300/25 monitor features System 1 Classic connectivity for Trendmaster SPA interface which enables users to leverage existing DSM SPA infrastructure.

The 2300 Vibration Monitors are designed for using on a broad range of machine trains or individual casings where the sensor point count fits the monitor's channel count and where advanced signal processing is desired.

Bently Nevada
a Baker Hughes business

Monitor Key Features

2300/20

- Two 4-20 mA outputs with internal current loop power supply.
- Continuous monitoring and protection
- Two acceleration/velocity/proximity inputs with synchronized sampling for advanced diagnostics.
- One dedicated speed channel supporting Proximity probes, Magnetic pickup and Proximity switch type sensors.
- Supports process variable on all three input channels.
- Key measurements (Acceleration pk, Acceleration rms, Velocity pk, Velocity rms, Displacement pp, Displacement rms, Speed) real-time provided with alarm configuration.
- Each channel has one measurement group, and can add additional two bandpass measurements and several nX measurements (depends on the device availability).
- LCD and LED for real time value and status display.
- Ethernet 10/100 Base-T communication for configuration using Bently Nevada Monitor Configuration software (Included) with RSA encryption.
- Local contacts for positive engagement of monitor bypass, configuration lockout, and latched alarm/relay reset.
- Two relay outputs with programmable setpoints.
- Three buffered transducer outputs (including Keyphasor signal) providing short circuit and EMI protection. Buffered outputs for each signal are through BNC connectors.
- Modbus over Ethernet.
- Alarm Data Capture

Caution: Two 4-20 mA outputs will **NOT** work with an external powered loop.

2300/25

- Trendmaster SPA interface.
- Continuous monitoring and protection.
- Two Acceleration/Velocity/Proximity inputs with synchronized sampling for advanced diagnostics.
- One dedicated speed channel supporting Proximity probes, Magnetic pickup and Proixmity switch type sensor.
- Support process variable on all three input channels.
- Key measurements (Acceleration pk, Acceleration rms, Velocity pk, Velocity rms, Displacement pp, Displacement rms, Speed) real-time provided with alarm configuration.
- Each channel has one measurement group, and can add additional two bandpass measurements and several nX measurements (depends on the device availability).
- LCD and LED for real time value and status display.
- Ethernet 10/100 Base-T communication for configuration using Bently Nevada Monitor Configuration software (included) with RSA encryption.
- ocal contacts for positive engagement of monitor bypass, configuration lockout, and latched alarm/relay reset.
- Two relay outputs with programmable setpoints.
- Three buffered transducer outputs (including Keyphasor signal) providing short circuit and EMI protection. Buffered outputs for each signal are through BNC connectors.
- Modbus over Ethernet.
- Alarm Data Capture

Specifications

Inputs

Power Input	
DC Input	18~36 Vdc, max 7.5 W

Channel Types	
ICP Accelerometers	
Configurable Bandpass filter	0.2 Hz to 20 kHz
Scale Factor range	5 to 1000 mV/g
Full scale range	2 to 80 g peak
Current Sink Source	3.3 mA ± 5%
Open Circuit Voltage	-21 to -24 Vdc
Velocity	
Configurable Bandpass filter	0.2 Hz to 20 kHz
Scale Factor range	5 to 1000 mV/in/s
Full scale range	0 to 50 in/s peak
Radial Vibration	
Configurable Bandpass filter	0.2 Hz to 20 kHz
Scale Factor range	5 to 1000 mV/mil
Full scale range	0 to 160 mil peak-peak
Thrust Channel	
Scale Factor range	5 to 1000 mV/mil

Channel Types	
Process Variable Channel	
Support most of unit with default on Temperature	
Channel Hardware Specification	
Configurable Upper OK limit	-0.25 to -22 V (greater than lower OK)
Configurable Lower OK limit	-0.25 to -22 V (less than upper OK)
Accuracy: ±1% of full scale range	
Independent 24-bit ADCs on input channels	
Supports Bently transducer or 2/3 wires custom transducer for Accelerometers, Velomitor and Proximitor.	
Speed/Keyphasor	
Keyphasor transducers support multiple events per revolution and event ratios for speed inputs up to 20 kHz.	
Threshold voltage resolution	0.1 Vdc

Interfaces	
Proximity Transducer Interface	
Supply Voltage	-22.8 to –25.2 Vdc
Maximum Rated Current	15 mA
Short Circuit Current	15.1 mA to 23.6 mA
Accuracy	±1% of full scale range
Input Impedance	3-wire Voltage Mode, 10 kΩ
RPM range	1 to 120,000
Proximity Switch Interface	
Supply Voltage	-10 to -24 Vdc

Interfaces	
Lower Not Ok limit	-2.75 ±0.05 V
Rpm range	1 to 60,000

Other Inputs	
Magnetic Pick up	
Input voltage	Adapt to sensor 284947 output
RPM range	200 to 120,000
Contact Inputs	
Monitor provides 3 contact capabilities with input terminals	Configuration lock Latched alarm/relay reset function Monitor Bypass
Activate	0 to 10 kΩ
De-activate	150 kΩ to infinite
Button Inputs	
External button to reset latched alarm and relay	
One buried button provides 3 functions	• Display monitor information • LCD contrast adjustment • Reset settings to default
Display Monitor Information	
Reset listed settings to **Default**	• User account name • IP Address • FW/HW version
Jumper Between COM & Chassis GND	
Jumpers are 2-pin terminal interfaces that connects COM to the Chassis ground (GND).	
Alternatively, COM can be connected to an earth ground separately through a terminal.	

Outputs

Buffered Output	
Three buffered outputs are available on the monitor through BNC connectors	2 Vibration Outputs 1 Speed Output
Relays	
Relays provide two dry-contact outputs	May be normally energized or de-energized No output feedback determination

Relay Circuit Specification in Non-Hazardous Area	
Type	Single pole, double throw
Sealing	Epoxy sealed
Contact life	100,000 cycles @ 5 amps 250 Vac 200,000 @ 1 amp, 24 Vdc
Insulationresistance	1000 MΩ minimum @ 500 Vdc
Relay closed contact resistance	1 Ω maximum
Relay open contact resistance	1 MΩ minimum
Maximum switched contact voltage	250 Vac / 250 Vdc
Maximum breaking contact current	6 A @250 Vac / 6 A @24 Vdc
Maximum switched power	1500VA AC / 150 Watts DC

Relay Circuit Specification in Hazardous Area	
Maximum switched contact voltage and current	6 A @24 Vac / 5 A @ 30 Vac / 5.8 A @24 Vdc / 4 A @30 Vdc

4-20mA Output (2300/20)

Two 4-20 mA outputs with internal current loop power supply

4 to 20 mA output values are proportional to the full-scale of the associated measurement.

Software configuration may determine the variable of each output. Voltage compliance: 0 to +12 Vdc range across load.

Load resistance: 0 to 600 Ω

Resolution: 0.3662 µA

Accuracy: 1% over operating temperature range

Update rate: 100 ms

Configurable with default 2 mA clamp current

No output feedback determination

Caution: Two 4-20 mA outputs will **NOT** work with an external powered loop.

SPA Output (2300/25)

Input signal range	High AC: 8 Vpp Low AC: 1.6 Vpp DC GAP: 0 to -20 Vdc (max measurable AC signal is 1 Vpp).
Accuracy	High/Low AC: ±1% of Full-Scale at 100 Hz DC GAP: ±0.5 V (measurable AC accuracy: ±20 mV)
Frequency response	10 Hz to 3000 Hz ±5%

Relay Circuit Specification in Hazardous Area	
LEDs	
OK	Indicates when the monitor is operating properly.
Protection fault	Indicates hardware fault that is impacting alarm determination.
User inhibit	Indicates the alarm/relays have been intentionally inhibited from operation.
Bypass	Indicates user initiated bypass action.
Relay status	Indicates if relays have been activated.
TX/RX	Indicates the Ethernet status and monitor communicating with remote software.
SPEED/AUX channel status	Indicates the speed channel has valid speed signal input OR operating correctly when AUX.
Channel Alarm Status	
Alert LED	Engages if any channel is in alert state.
Danger LED	Engages if any channel is in danger state.

LCD Display

Allows viewing machine speed, vibration measurements value, setpoints, and configuration information.

Bently Nevada
a Baker Hughes business

Communications

Ethernet	Ethernet, 10Base-T and 100Base-TX. Conforms to IEEE802.3 RJ-45 for 10Base-T/100Base-TX Ethernet cabling Cable length: 100 meters (328 ft.) maximum

Environmental Limits

Operating Temperature	-30°C to +65°C (-22°F to +149°F)
Storage Temperature	-40°C to +85°C (-40°F to +185°F)
Humidity	Up to 95%, non-condensing
Vibration Limitation	3 g
Battery Life for Real Time Clock	Powered: 38 years @ 50°C (122°F) Un-powered: 12 years @ 50°C (122°F)

Physical

Dimensions (Width x Depth x Height)	127 mm x 127 mm x 76.2 mm (5 in. x 5 in. x 3 in.)
Weight	1.03 kg (2.26 lbs)
Mounting	Panel mount or DIN rail (adapter included)

System 1 Evolution Connectivity

2300 monitors connect to System 1 Evolution and support current value and time-based data collection of all static values, waveforms, and spectral data. This includes System1 Software's full suite of plots and tools for condition monitoring and asset management.

When an alarm is triggered on the 2300 monitor, the following high-resolution alarm data is forwarded to System 1.

Trend Measurements:

	Duration	Intervals
Pre-Event Data	10 minutes	1 second
	20 seconds	100 milliseconds
Post-Event Data	10 seconds	100 milliseconds
	1 minute	1 second

Spectrums/Waveforms:

	Duration	Intervals
Pre-Event Data	2.5 minutes	10 seconds
Post-Event Data	1 minute	10 seconds

In the event of a network disruption between the 2300 and System 1, the 2300 can store up to at least 5 alarm data captures. (This requires System 1 Evolution 21.1 or newer and Firmware release 3.2 or newer for 2300.)

Compliance and Certifications

FCC

This device complies with part 15 of the FCC Rules. Operation is subject to the following two conditions:

- This device may not cause harmful interference.
- This device must accept any interference received, including interference that may cause undesired operation.

EMC

EN 61000-6-2 : 2005

EN 61000-6-4: 2007 +A1

EN 61326-1: 2013

EN 61326-2-3: 2013

EMC Directive 2014/30/EU

Electrical Safety

EN 61010-1: 2010

LV Directive 2014/35/EU

ATEX

EN 60079-0: 2012/A11:2013

EN 60079-11: 2012

EN60079-15: 2010

EN60079-7: 2015

ATEX Directive 2014/34/EU

RoHS

RoHS Directive 2011/65/EU

Hazardous Area Approvals

For the detailed listing of country and product-specific approvals, refer to the *Approvals Quick Reference Guide (108M1756)*.

For additional technical documentation, please log in to bntechsupport.com and access the Bently Nevada Media Library.

CSA/NRTL/C

Class I, Division 2/ Zone 2

AEx nA nC [ic] IIC T4 Gc
Class I, Division 2, Groups A, B, C, and D; T4

ATEX/IECEx

2300/20

II 3 G
Ex na nC [ic] IIC T4 Gc
Ex ec nC [ic] IIC T4 Gc

T4 @ Ta = -30°C to +65°C

2300/25

II 3 G
Ex na nC ic [ic] IIC T4 Gc
Ex ec nC ic [ic] IIC T4 Gc

T4 @ Ta = -30°C to +65°C

Ordering Information

For the detailed listing of country and product-specific approvals, refer to the *Approvals Quick Reference Guide (108M1756)*.

For additional technical documentation, please log in to bntechsupport.com and access the Bently Nevada Media Library.

2300 Series Vibration Monitor

2300/20-AA: Monitor with 4-20 ma Outputs

(including DIN rail mount assembly, manual and monitor configuration software)

A: Approvals Option	
00	None
02	Multiple Explosive Atmosphere Certifications(ATEX/IECEx/CSA)

2300/25-AA: Monitor with SPA Outputs

(including DIN rail mount assembly, manual and monitor configuration software)

A: Approvals Option	
00	None
02	Multiple Explosive Atmosphere Certifications (ATEX/IECEx/CSA)

2300/20 KIT-AAA-BB

Bently Nevada 2300/20 Condition Monitoring System Kit

A: Configuration	
001	**2 Sensors and 1 Housing** • 1 - 2300/20 Monitor • 1 - 6 ft. (1.8 m) shielded Ethernet cable • 1 - Housing Kit: 105M6193-01 (fiberglass housing for nonhazardous area) or 105M6193-03 (stainless steel housing for hazardous area) 18.03 x 15.04 x 6.3 in. • 2 - Accelerometer sensors (AM3100T2-Z2) • 2 - 17 ft. (5.2 m) cables (9571) • (Excluding Keyphasor sensor and 24 Vdc power supply1)
002	**1 Sensor and 1 Housing** • 1 - 2300/20 or 2300/25 Monitor • 1 - 6 ft. (1.8 m) shielded Ethernet cable • 1 - Housing Kit: 105M6193-01 (fiberglass housing for nonhazardous area) or 105M6193-03 (stainless steel housing for hazardous area) 18.03 x 15.04 x 6.3 in. • 1 - Accelerometer sensor (AM3100T2-Z2) • 1 - 17 ft. (5.2 m) cable (9571) • (Excluding Keyphasor sensor and 24 Vdc power supply1)
003	**2 Sensors** • 1 - 2300/20 Monitor • 1 - 6 ft. (1.8 m) shielded Ethernet cable • 2 - Accelerometer sensors (AM3100T2-Z2) • 2 - 12 ft. (3.6 m) cables (9571) • (Excluding Keyphasor sensor and 24 Vdc power supply1)

004	**2 Velomitors and 1 Housing** • 1 - 2300/20 Monitor • 1 - 6 ft. (1.8 m) shielded Ethernet cable • 1 - Housing Kit: 105M6193-01 (fiberglass housing for nonhazardous area) or 105M6193-03 (stainless steel housing for hazardous area) 18.03 x 15.04 x 6.3 in. • 2 - Velomitor sensors (330500) • 2 - 17 ft. (5.2 m) cable (9571) • (Excluding Keyphasor sensor and 24 Vdc power supply1)
005	**1 Velomitor and 1 Housing** • 1 - 2300/20 Monitor • 1 - 6 ft. (1.8 m) shielded Ethernet cable • 1 - Housing Kit: 105M6193-01 (fiberglass housing for nonhazardous area) or 105M6193-03 (stainless steel housing for hazardous area) 18.03 x 15.04 x 6.3 in. • 1 - Velomitor sensor (330500) • 1 - 17 ft. (5.2 m) cable (9571) • (Excluding Keyphasor sensor and 24 Vdc power supply1)
006	**2 Velomitors** • 1 - 2300/20 Monitor • 1 - 6 ft. (1.8 m) shielded Ethernet cable • 2 - Velomitor sensors (330500) • 2 - 12 ft. (3.6 m) cable (9571) • (Excluding Keyphasor sensor and 24 Vdc power supply1)
B: Approvals Options	
00	None
02	Multiple Explosive Atmosphere Certifications (ATEX/IECEx/CSA

1 Three kinds of power supplies provide different temperature and power ranges. Verify the necessary details in the Accessories section to follow.

2300/25 KIT-AAA-BB

Bently Nevada 2300/25 Condition Monitoring System Kit

A: Configuration	
001	**2 Sensors and 1 Housing** • 1 - 2300/25 Monitor • 1 - 6 ft. (1.8 m) shielded Ethernet cable • 1 - Housing Kit: 105M6193-01 (fiberglass housing for nonhazardous area) or 105M6193-03 (stainless steel housing for hazardous area) 18.03 x 15.04 x 6.3 in. • 2 - Accelerometer sensors (200350) • 2 - 17 ft. (5.2 m) cables (9571) • (Excluding Keyphasor sensor and 24 Vdc power supply 1)
002	**1 Sensor and 1 Housing** • 1 - 2300/25 Monitor • 1 - 6 ft. (1.8 m) shielded Ethernet cable • 1 - Housing Kit: 105M6193-01 (fiberglass housing for nonhazardous area) or 105M6193-03 (stainless steel housing for hazardous area) 18.03 x 15.04 x 6.3 in. • 1 - Accelerometer sensor (200350) • 1 - 17 ft. (5.2 m) cable (9571) • (Excluding Keyphasor sensor and 24 Vdc power supply1)

003	**2 Sensors** • 1 - 2300/25 Monitor • 1 - 6 ft. (1.8 m) shielded Ethernet cable • 2 - Accelerometer sensors (200350) • 2 - 12 ft. (3.6 m) cables (9571) • (Excluding Keyphasor sensor and 24 Vdc power supply[1])
004	**2 Velomitors and 1 Housing** • 1 - 2300/25 Monitor • 1 - 6 ft. (1.8 m) shielded Ethernet cable • 1 - Housing Kit: 105M6193-01 (fiberglass housing for nonhazardous area) or 105M6193-03 (stainless steel housing for hazardous area) 18.03 x 15.04 x 6.3 in. • 2 - Velomitor sensors (330500) • 2 - 17 ft. (5.2 m) cable (9571) • (Excluding Keyphasor sensor and 24VDC power supply[1])
005	**1 Velomitor and 1 Housing** • 1 - 2300/25 Monitor • 1 - 6 ft. (1.8 m) shielded Ethernet cable • 1 - Housing Kit: 105M6193-01 (fiberglass housing for nonhazardous area) or 105M6193-03 (stainless steel housing for hazardous area) 18.03 x 15.04 x 6.3 in. • 1 - Velomitor sensor (330500) • 1 - 17 ft. (5.2 m) cable (9571) • (Excluding Keyphasor sensor and 24 Vdc power supply[1])
006	**2 Velomitors** • 1 - 2300/25 Monitor • 1 - 6 ft. (1.8 m) shielded Ethernet cable • 2 - Velomitor sensors (330500) • 2 - 12 ft. (3.6 m) cable (9571) • (Excluding Keyphasor sensor and 24VDC power supply[1])

B: Approvals Option	
00	None
02	Multiple Explosive Atmosphere Certifications (ATEX/IECEx/CSA

[1] Three kinds of power supplies provide different temperature and power ranges. Verify the necessary details in the Accessories section to follow.

System 1 Software

2300/20 can interface to System 1 V16.2 or higher for expanded condition monitoring and analysis. System 1 software and the 2300 device connectivity (P/N 3071/13) are sold separately. Refer to document 108M5214 for System 1 detailed information.

3071/13-AA-BB

System 1 2300 Series Device Import

A: Not available for 2300 monitor	
00	
B: Quantity of 2300 Monitoring Systems	
##	Numeric [1->n]

Accessories

110M7102-01	Power supply for DIN rail mounting, 100/240 AC to 24 DC/1.3 A Certifications (CID2 by UL) (-25°C ~70°C, 22.5 x 99 x 107 mm) (One power can drive max 4 monitors.)
106M6694-01	Power supply for DIN rail mounting, 110/220AC to 24VDC/5A Certifications (ATEX, IECEx, CID2 by UL) (-40°C ~70°C, 40 x 130 x 12 mm) (One power can drive max 10 monitors.)
106M7607-01	Power supply for DIN rail mounting, 100/240AC to 24DC/2.5A Certifications (ATEX) (-25°C ~70°C, 40 x 99 x 114 mm) (One power can drive max 6 monitors.)
105M6193-01	Fiberglass NEMA 4X/IP66 weatherproof housing with window in door (includes mounting plate for monitor)
105M6193-02	Stainless Steel Housing for 2300 KIT (can only be used in non-hazardous area)
105M6193-03	Stainless Steel Housing for 2300 KIT (can be used in hazardous area)

Proximity Transducer System

Refer to the following proximity transducer system datasheets for details.

172036	3300 5mm
141194	3300 XL 8mm
146256	3300 XL 11mm
147385	3300 XL NSV

02120015	Bulk Cable from Proximity sensor to monitor (500 ft.)

9571-AA2	Low cost cable for accelerometer

A: From "02" to "99" Increments of 1.0 foot

INCREMENTS OF 1.0 FOOT	
EXAMPLE:	1 2 = 12 FEET
	2 5 = 25 FEET
MIN LENGTH = 2.0 FEET MAX LENGTH = 99 FEET	6

84661-AA2	Armored cable for 2 -wire transducer

A: From "03" to "99" Increments of 1.0 foot

INCREMENTS OF 1.0 FOOT	
EXAMPLE:	1 2 = 12 FEET
	2 5 = 25 FEET
MIN LENGTH = 3.0 FEET MAX LENGTH = 99 FEET	

CB2W100-AAA	Cable for 2-wire transducer

The CB2W100 cable is not recommended for use with the 200350 Accelerometer. The O-ring will not form a proper seal with the accelerometer.

A: Cable Length	
015	15 ft. (4.8 m)
032	32 ft. (9.8 m)
064	64 ft. (19.5 m)
112	112 ft. (34.1 m)
125	125 ft. (38.1 m)
150	150 ft. (45.7 m)
200	200 ft. (61.0 m)
250	250 ft. (76.2 m)

2 Cable lengths greater than 30 meters (100 feet) will experience some attenuation of amplitudes at higher frequencies when using the AM3100T2-Z2 Accelerometer.

Splash Proof Cable for 2-wire transducer

9571 Mod : 285031-AA2

Cable for 2-wire extension with Splash Proof Connection. This cable assembly provides an equivalent IP66 level of protection.

A: Cable Lengths	
16	16 ft. (4.8 m)
32	32 ft. (9.8 m)
64	64 ft. (19.5 m)

For conducted RF performance, metal conduit with both ends grounded is required for Proximitor 3300-NSV cables and Accelerometer 330400 cable.

[2] Cable lengths greater than 30 meters (100 feet) will experience some attenuation of amplitudes at higher frequencies when using the AM3100T2-Z2 Accelerometer.

286244	Magnetic mounting base ¼-28 threaded hole

Ethernet Cables

138131-AAA

Standard 10 Base-T/100 Base-TX Shielded Category 5 Cable with RJ-45 connectors (solid conductor)

A: Cable Length	
006	6 ft. (1.8 m)
010	0 10 ft. (3.0 m)
025	25 ft. (7.6 m)
040	40 ft. (12.2 m)
050	50 ft. (15.2 m)
075	75 ft. (22.9 m)
085	85 ft. (25.9 m)
100	100 ft. (30.5 m)

Spares

105M6203-01	35mm DIN rail mount and screws (included with 2300/20 monitor)
106M3210	10-pin 4-20mA output connector
106M2223	5-pin contact input connector (Alarm Reset)
106M3408	5-pin contact input connector (Alarm Inhibit, Config lock)
106M3211	16-pin transducer input connector
106M3212	6-pin relay output connector
106M2231	3-pin power input connector

Accessories

02120015	Bulk Cable from Proximity sensor to monitor (500 ft.)
9571-AA[2]	Low cost cable for 2-wire transducer

[2] Cable lengths greater than 30 meters (100 feet) will experience some attenuation of amplitudes at higher frequencies when using the AM3100T2-Z2 Accelerometer.

Software

100M9465-01	BN Monitor Configuration SW/FW DVD • BNMC version 5.2 or greater • 2300 series monitor firmware • (DVD includes 2300 Series Software Guide)

Additional Information

- 2300 Series Operation and Maintenance Manual (Document 105M0341)
- 2300 Field Wiring Diagram (Document 106M5801)
- 2300 Series Software Guide (Document 107M7626)
- 2300 Series Monitor Installation Guide (Document 121M3029)

Graphs and Figures

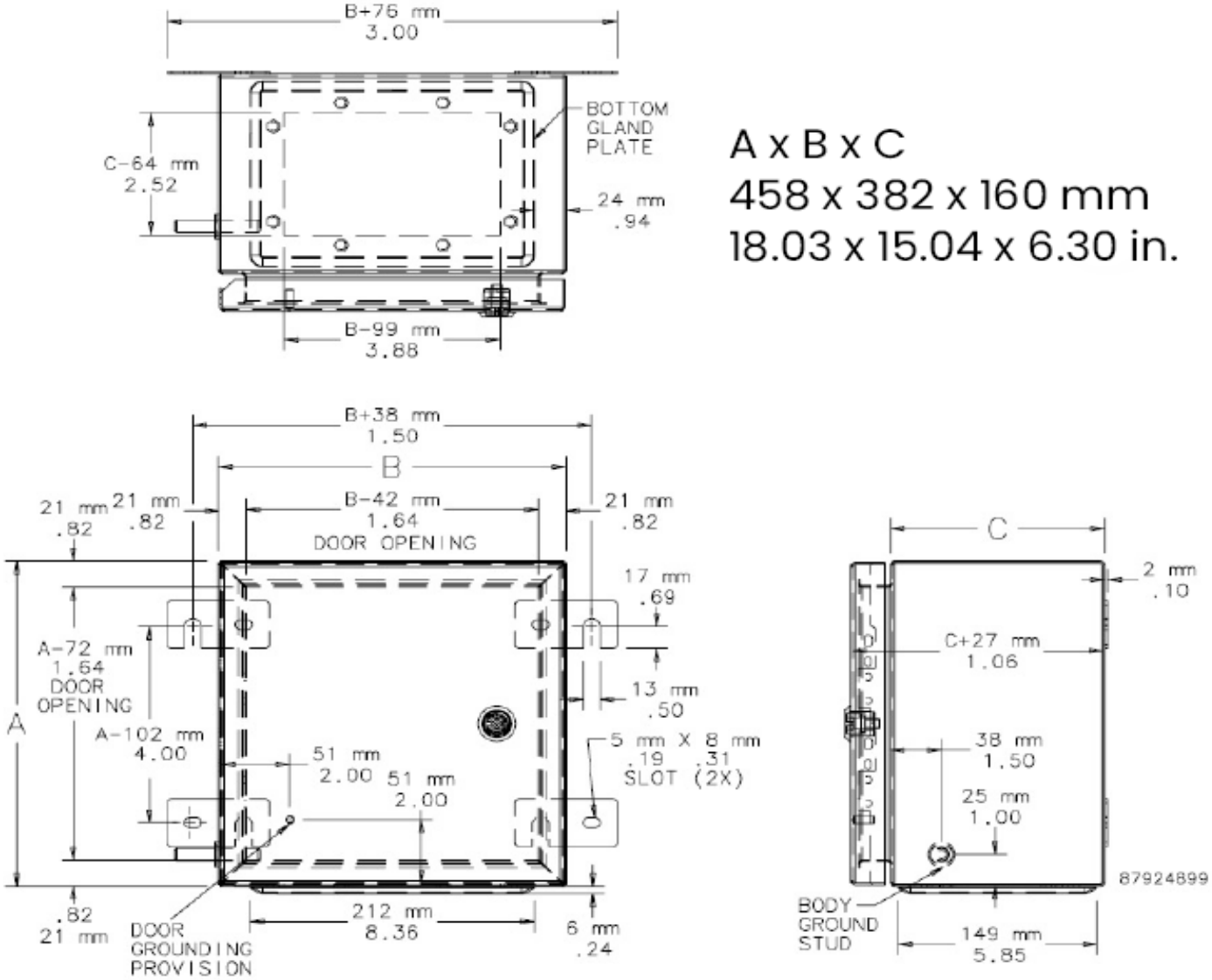

Figure 1: 105M6193-03 Weatherproof Housing

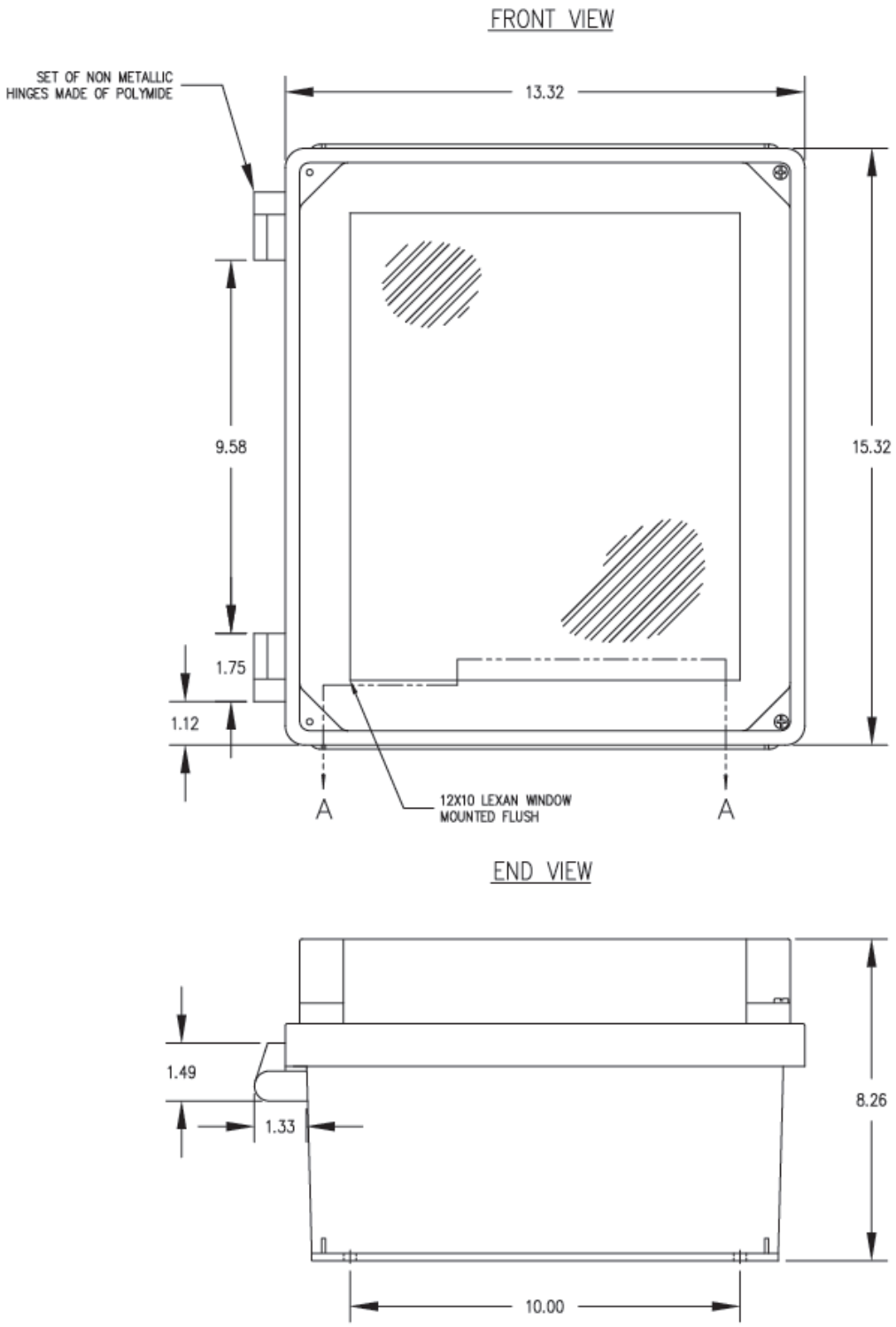

Figure 2: 105M6193-01 Weatherproof Housing

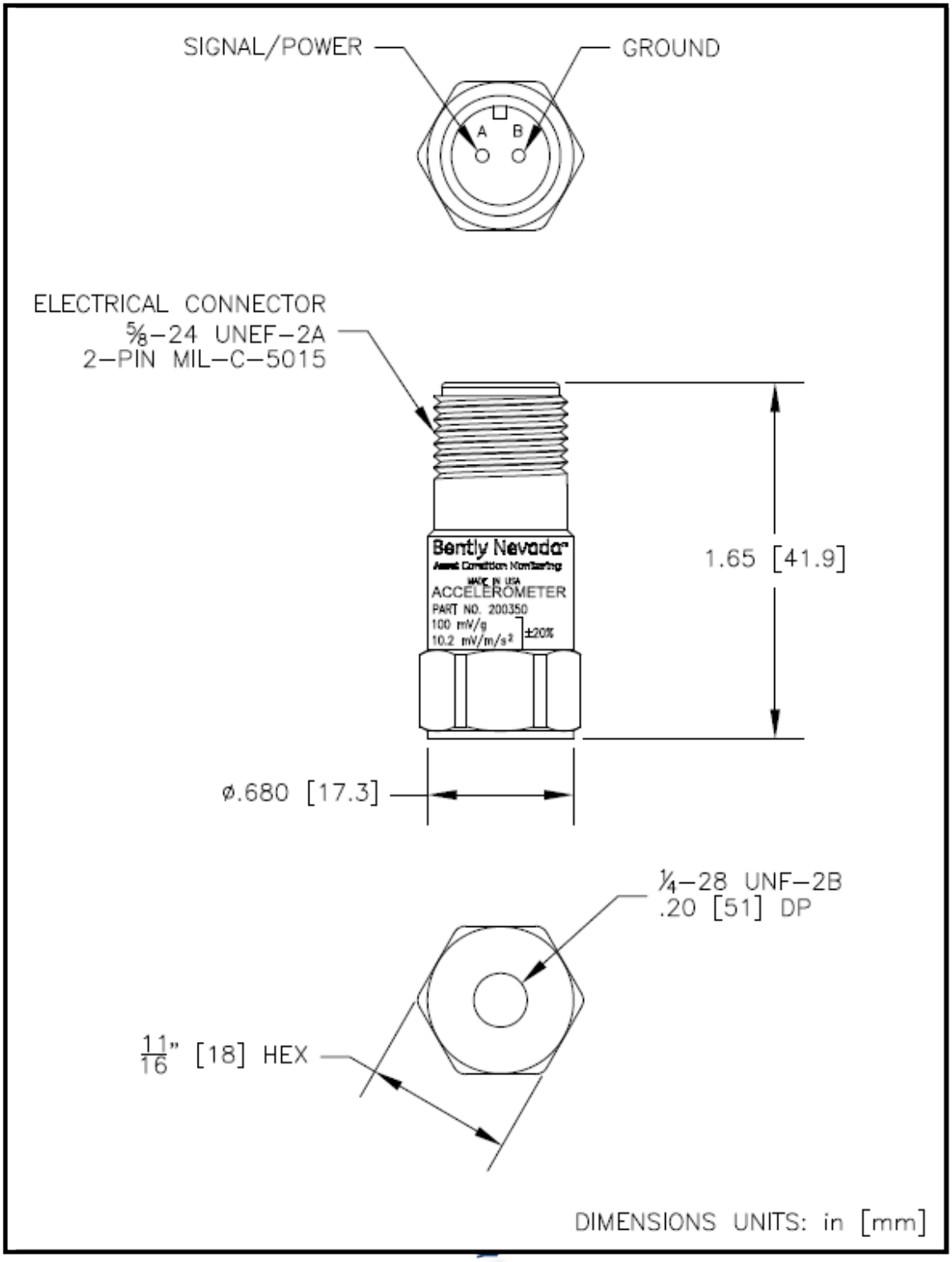

Figure 3: 200350 Accelerometer Sensor

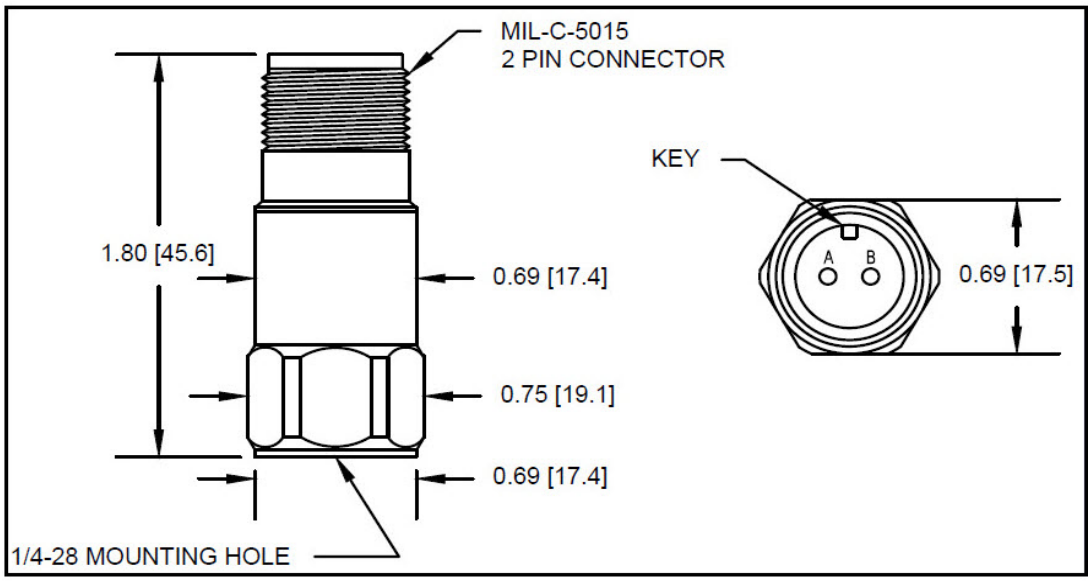

Figure 4: AM3100T2-Z2 Accelerometer Sensor

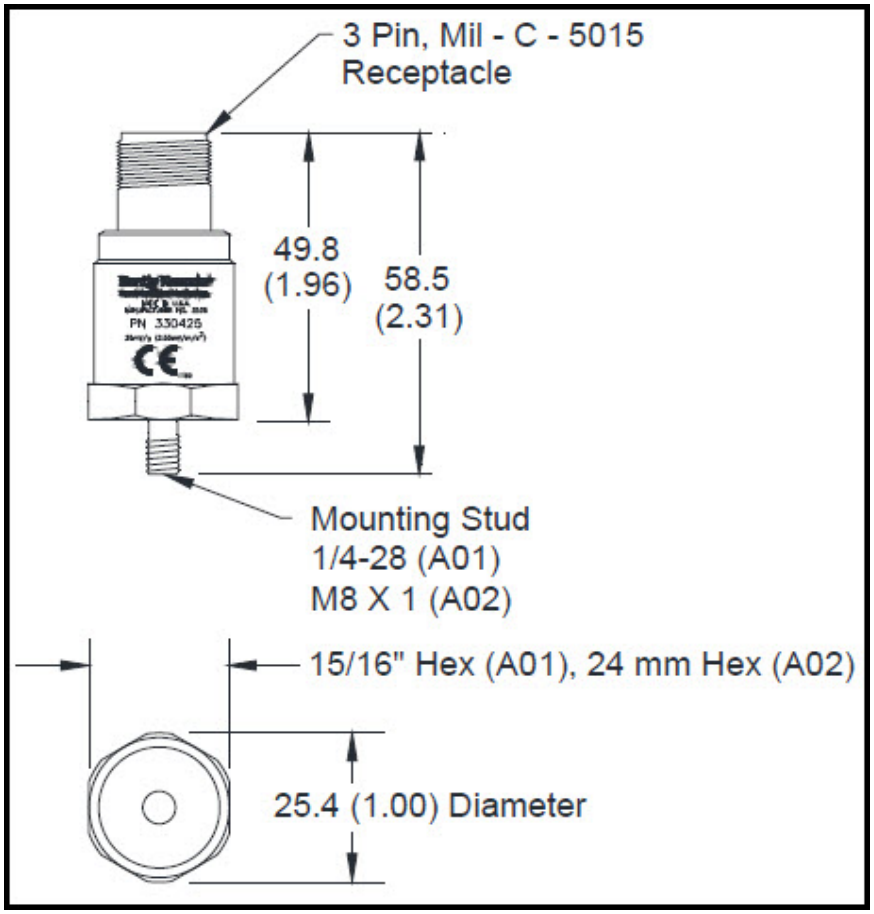

Figure 5: 330400/330425 Accelerometer Sensor

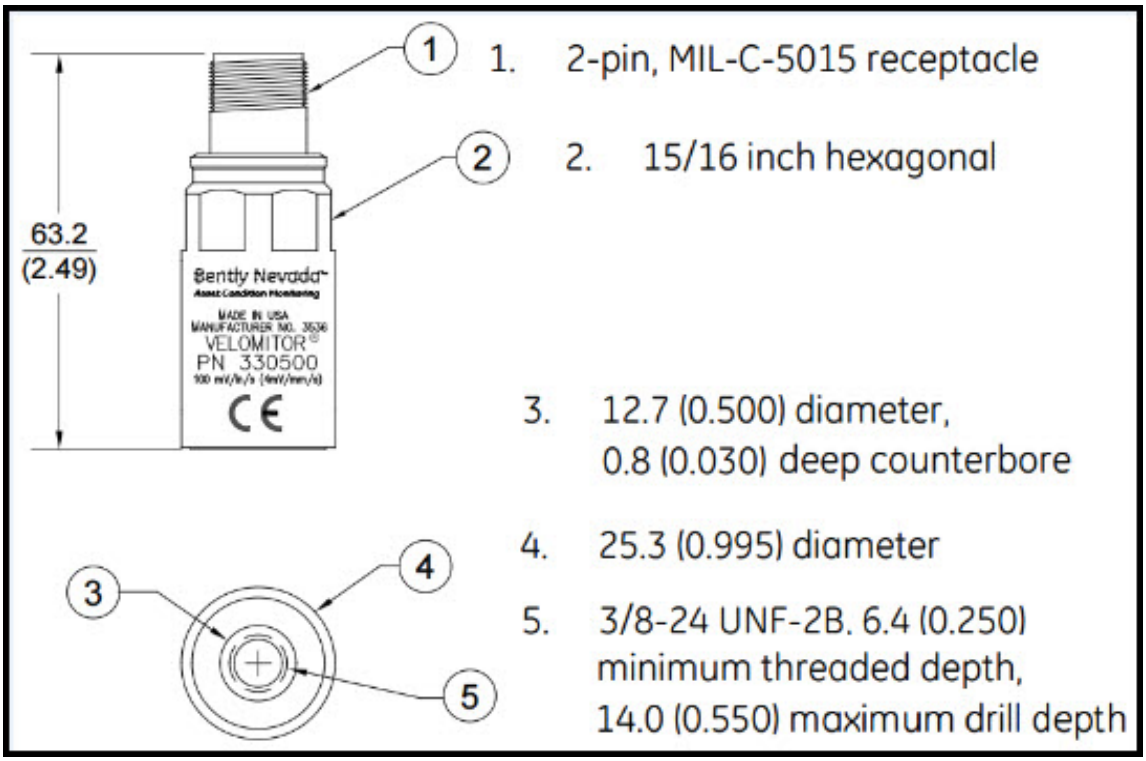

Figure 6: 330500 Velomitor

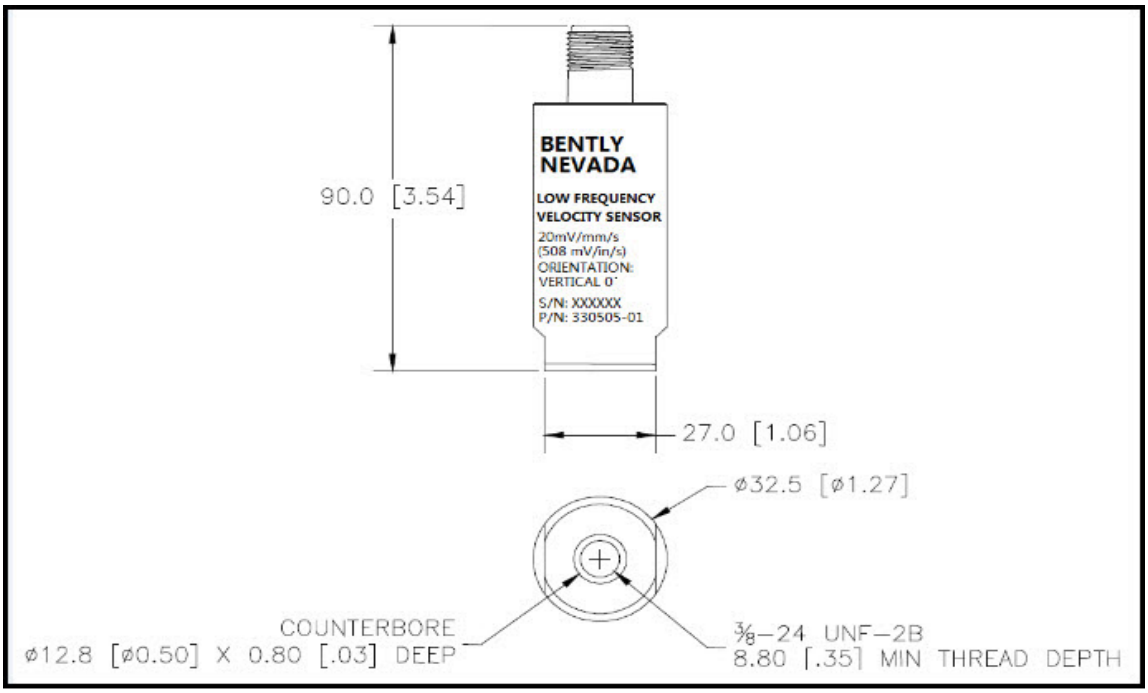

Figure 7: 330505 Velomitor

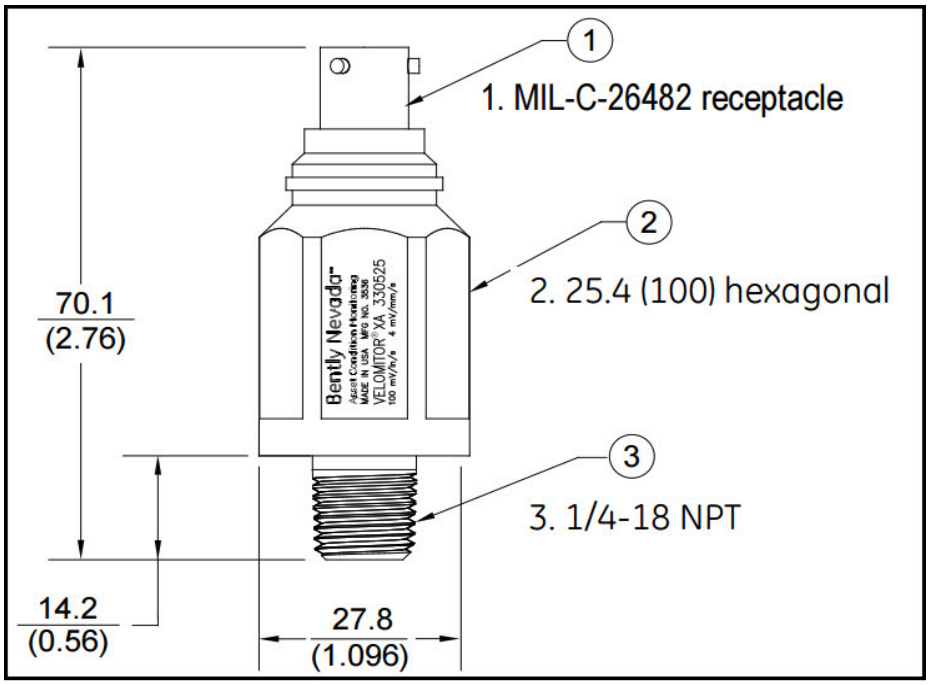

Figure 8: 330525 Velomitor

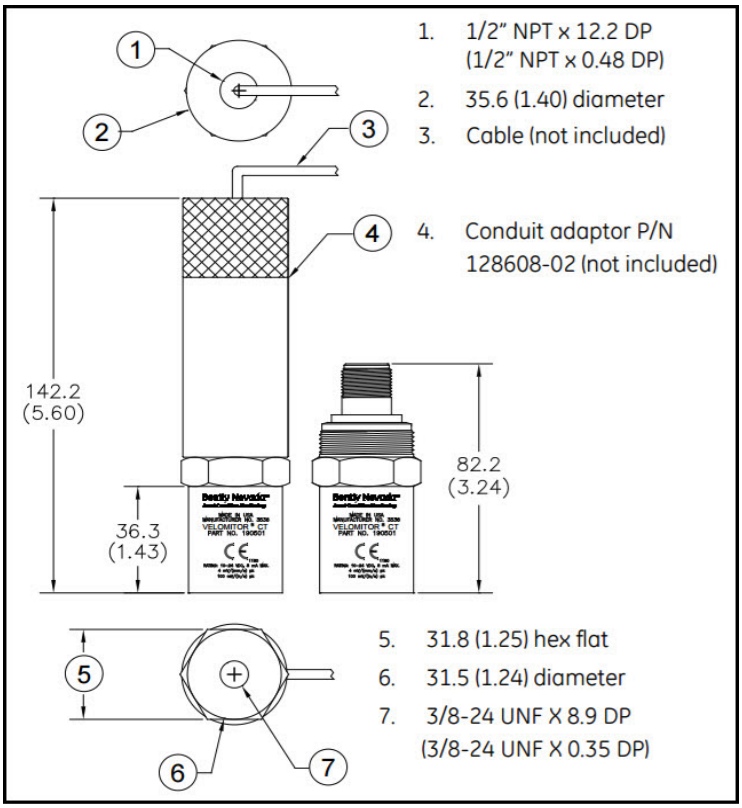

Figure 9: 190501 Velomitor

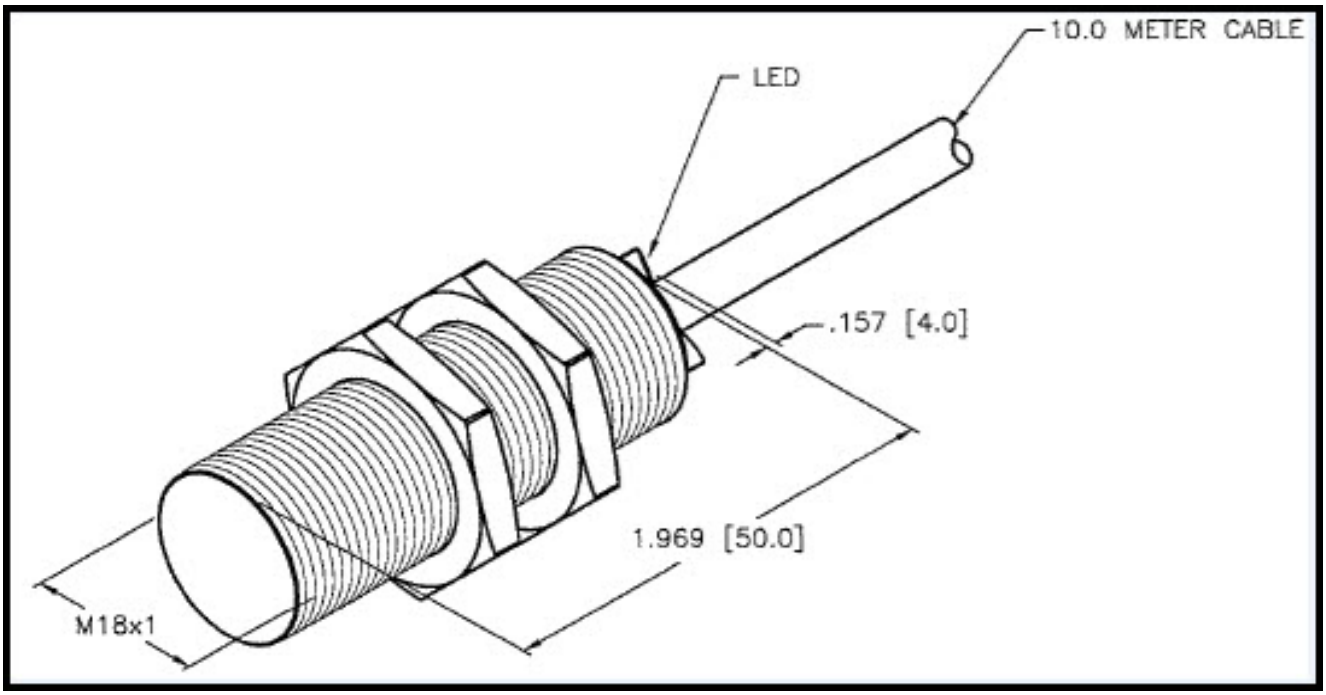

Figure 10: 100M0741 Proximity Switch

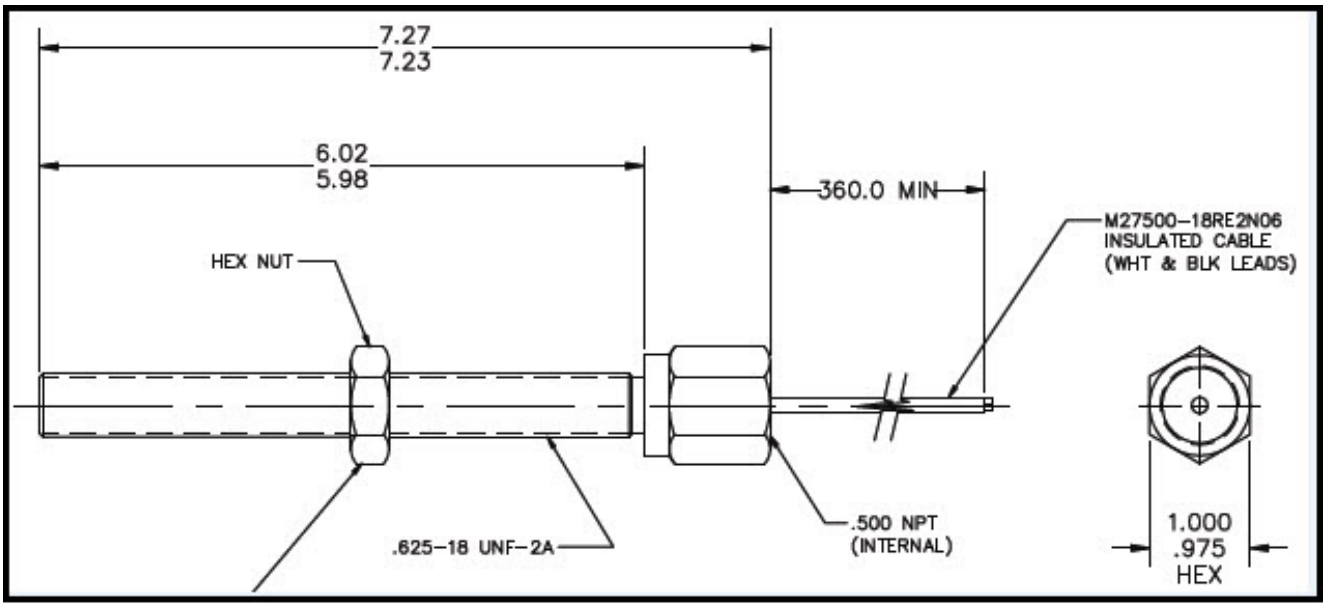

Figure 11: 284947 Magnetic Pickup

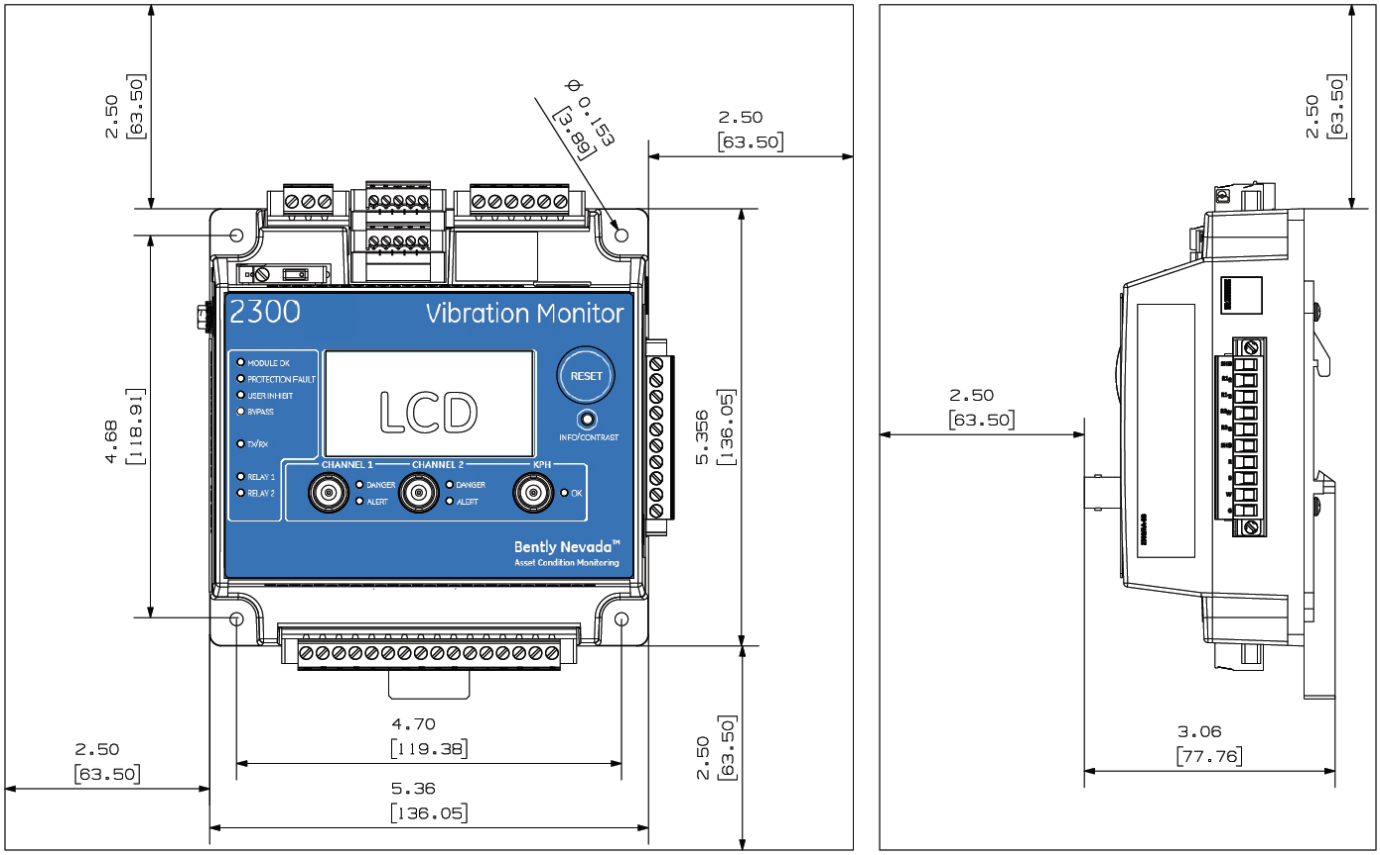

Figure 12: 2300 Series Monitor Recommended Clearance

Wiring Diagram

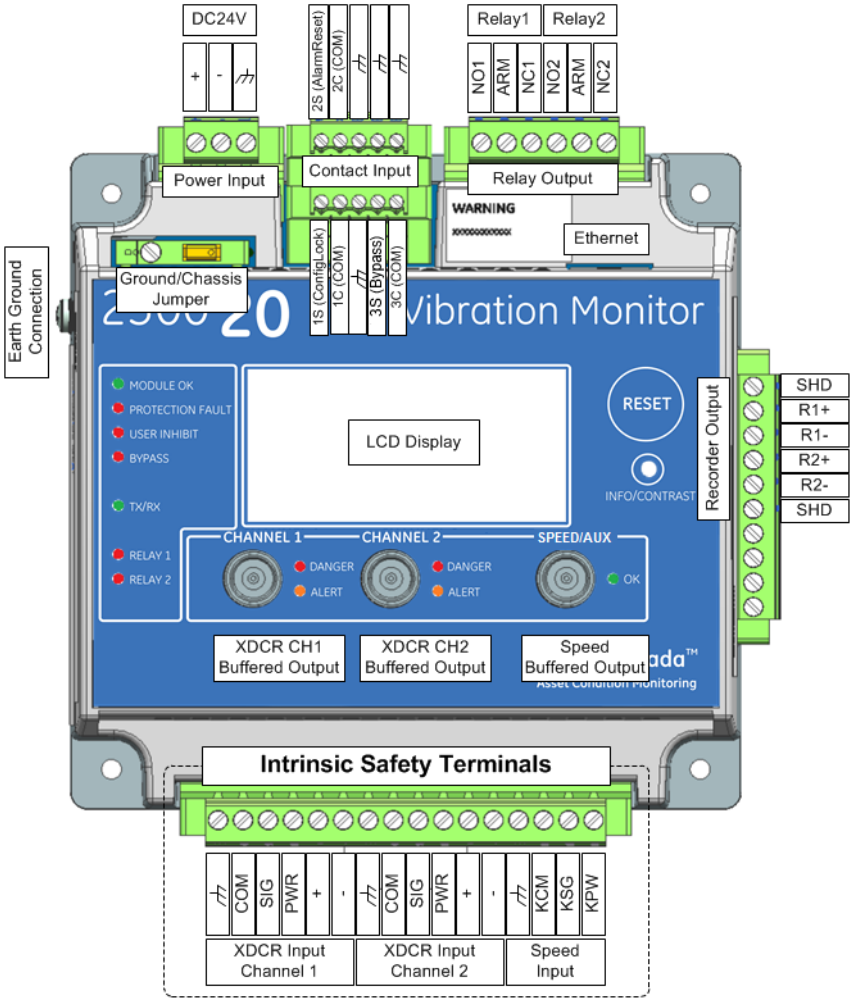

Figure 13: 2300/20 Wiring Diagram

2300/20 and 2300/25 use the same interface connector for recorder output or SPA output.

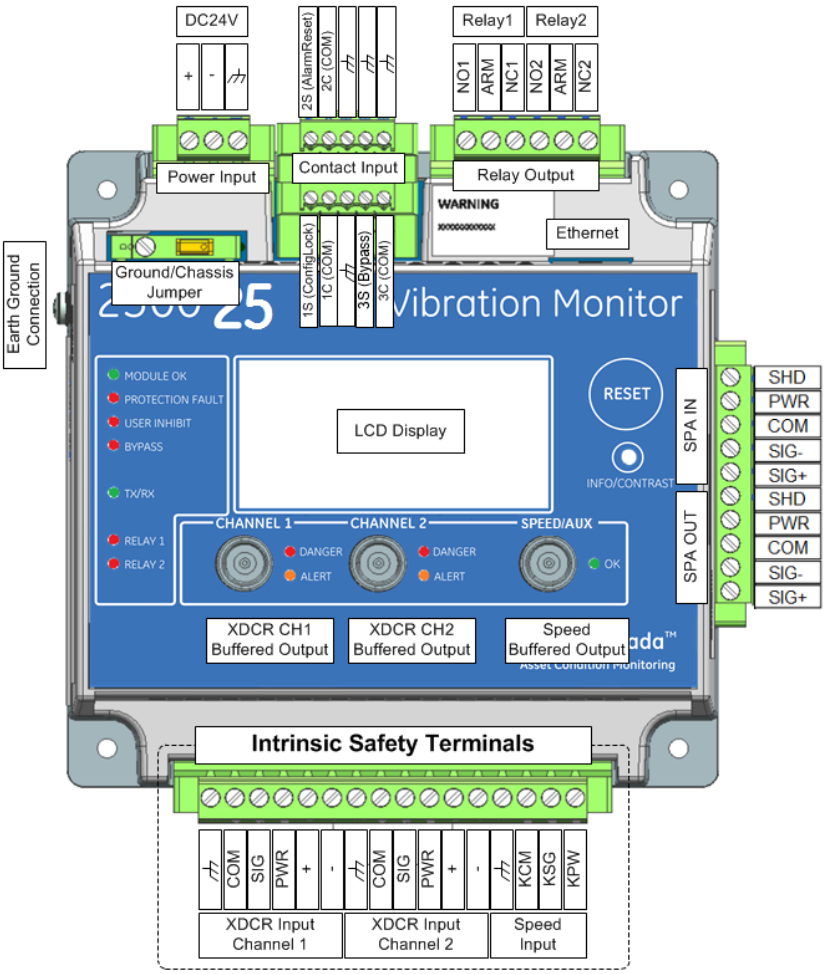

Figure 14: 2300/25 Wiring Diagram

2300/20 and 2300/25 use the same interface connector for recorder output or SPA output.

Copyright 2024 Baker Hughes Company. All rights reserved.

Bently Nevada and Orbit Logo are registered trademarks of Bently Nevada, a Baker Hughes business, in the United States and other countries. The Baker Hughes logo is a trademark of Baker Hughes Company. All other product and company names are trademarks of their respective holders. Use of the trademarks does not imply any affiliation with or endorsement by the respective holders.

Baker Hughes provides this information on an "as is" basis for general information purposes. Baker Hughes does not make any representation as to the accuracy or completeness of the information and makes no warranties of any kind, specific, implied or oral, to the fullest extent permissible by law, including those of merchantability and fitness for a particular purpose or use. Baker Hughes hereby disclaims any and all liability for any direct, indirect, consequential or special damages, claims for lost profits, or third party claims arising from the use of the information, whether a claim is asserted in contract, tort, or otherwise. Baker Hughes reserves the right to make changes in specifications and features shown herein, or discontinue the product described at any time without notice or obligation. Contact your Baker Hughes representative for the most current information.

The information contained in this document is the property of Baker Hughes and its affiliates; and is subject to change without prior notice. It is being supplied as a service to our customers and may not be altered or its content repackaged without the express written consent of Baker Hughes. This product or associated products may be covered by one or more patents. See Bently.com/legal.

1631 Bently Parkway South, Minden, Nevada USA 89423
Phone: 1.775.782.3611 (US) or Bently.com/support
Bently.com